SLS32GGG

SPECIFICATION SHEET
WWW.CONEN-PRODUKTE.DE

QICKLY® SHELF, 2 FILE HEIGHTS, 12 LARGE ERGO TRAY BOXES

W/H/D: 104.2X74.3X42.6 CM

PRODUCT

Our qickly® shelving system impresses with its 45 degree miter and ABS edge in multiplex look. The body color is white melamine. This ultra-modern design makes classrooms and offices a real eye-catcher.

The shelf shines with plenty of storage space and mobility, making it suitable for use in both schools and offices. It contains 12 large Ergo Tray boxes in which all your documents can be organized. In addition, the cabinet system can be extended at any time and can also be ordered with a set of castors, two of which are lockable.

The plinth height is 8.6 cm. The plinth height does not change when using optional castors. The material thickness of the walls and shelves is 19 mm, the fixed rear panel is 8 mm thick and guarantees a high level of stability.

The cabinet is delivered to you disassembled including assembly instructions for self-assembly. As the name of our product range suggests, the qickly® cabinet and shelving system impresses with its fast delivery.

qickly® - Smart. Fast. Simple.

Accessories

Castor set consisting of 4 castors for cabinets and shelves

FEATURES

- Delivery disassembled for self-assembly
- 45 degree miter
- ABS edge in multiplex look
- Intelligent modular system
- White melamine decor
- plinth height 8.6 cm
- stable 8 mm thick back panel
- qickly® - delivered quickly

Free-standing

Mobile

Conen Produkte GmbH is not responsible for printing errors. Conen Produkte GmbH reserves the right to change or modify pricing and product specifications with or without prior notification. Illustrations may not be exactly as shown. No parts may be reproduced by any means without prior authorization of Conen Produkte GmbH. All rights reserved 2026.

Item number	SLS32GGG	
Width / Height / Depth	1042 mm / 743 mm / 426 mm	41" / 29.3" / 16.8"
Folder heights	2	
Storage boxes	12	
Placement	Platform stand, Mobile	
Mounts application field	Primary school, Secondary school, Office furniture	
Material	Melamine board	
Product line	Qickly	
Packages	**Package dimensions WxHxD**	**Package weight**
SLS32-1	796 x 112 x 462 mm / 31.3 x 4.4 x 18.2"	23 kg / 50.7 lbs
SLS32-2	1094 x 86 x 461 mm / 43.1 x 3.4 x 18.1"	17 kg / 37.5 lbs
SLSC2-99	328 x 396 x 188 mm / 12.9 x 15.6 x 7.4"	1,6 kg / 3.5 lbs
Total weight		41,6 kg / 91.7 lbs

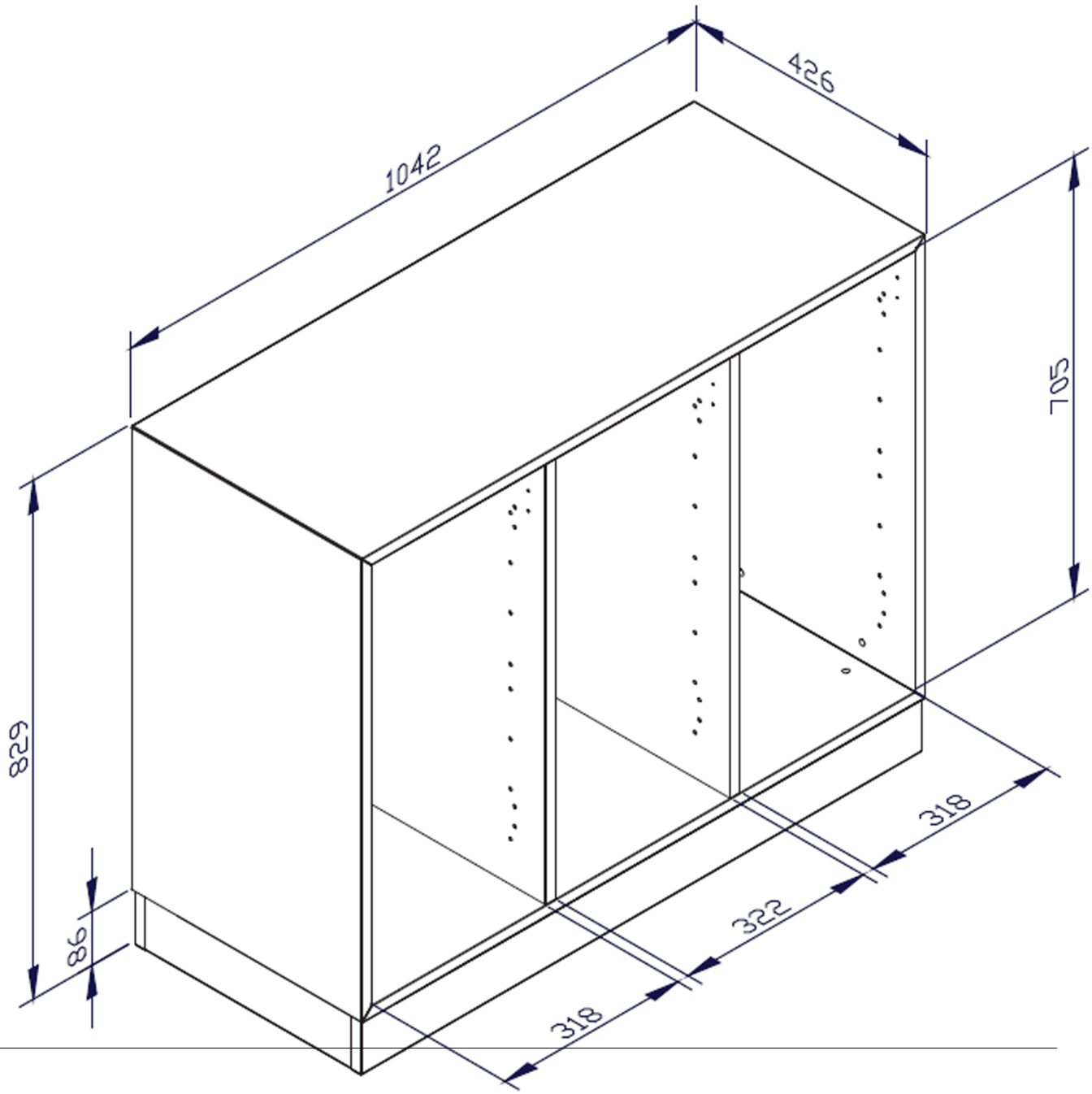

Conen Produkte GmbH
Conenstr. 4
54497 Morbach-Gonzerath
Germany

T +49 6533 75-100
F +49 6533 75-600
E info@conen-produkte.de
www.conen-produkte.de

© Copyright by Conen Produkte GmbH

Conen Produkte GmbH is not responsible for printing errors. Conen Produkte GmbH reserves the right to change or modify pricing and product specifications with or without prior notification. Illustrations may not be exactly as shown. No parts may be reproduced by any means without prior authorization of Conen Produkte GmbH. All rights reserved 2026.